Current part is item (11) on diagram. Available at www.oshkoshequipment.com

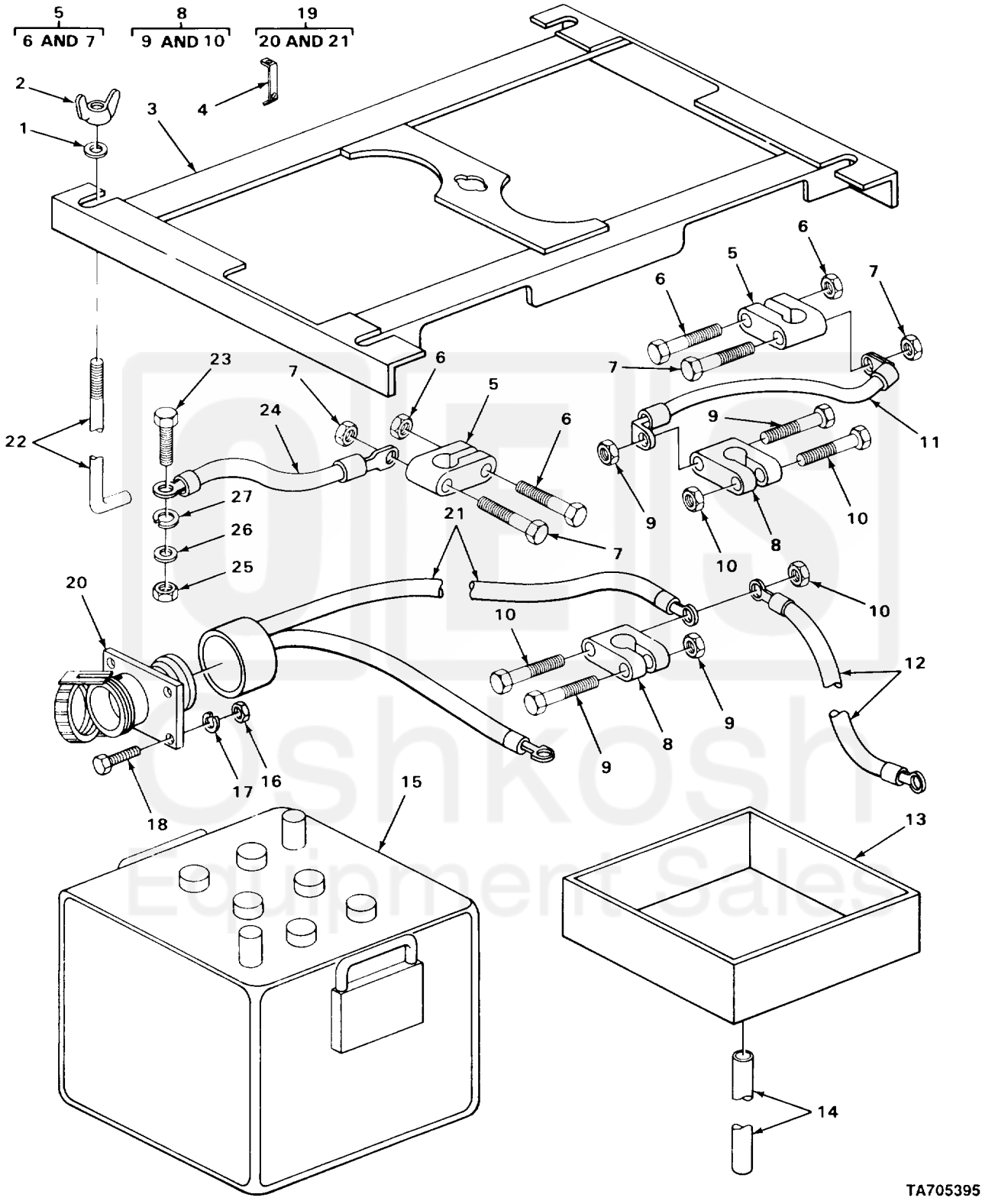

FIGURE 69. BATTERY, HOLD-DOWN, AND CABLES.

Current part is item (11) on diagram. Available at www.oshkoshequipment.com

Current part is item (11) on diagram. Available at www.oshkoshequipment.com

(1) ITEM NO	(2) SMR CODE	(3) CAGEC	(4) PART NUMBER	(5) DESCRIPTION AND USABLE ON CODES (UOC)	(6) QTY
				GROUP 0612 BATTERIES, STORAGE	
				FIG. 69 BATTERY, HOLD-DOWN, AND CABLES	
1	PFOZZ	96906	MS27183-12	WASHER,FLAT BATTERY HOLD-DOWN UOC:CQK,U72	5
1	PFOZZ	96906	MS27183-14	WASHER,FLAT BATTERY HOLD-DOWN UOC:CMP,CMQ,U73,U74	5
2	PFOZZ	96906	MS35425-72	NUT,PLAIN,WING BATTERY HOLD-DOWN UOC:CQK,U72	5
2	PFOZZ	96906	MS35425-74	NUT,PLAIN,WING BATTERY HOLD-DOWN UOC:CMP,CMQ,U73,U74	5
3	PAOZZ	96906	MS53046-3	RETAINER,BATTERY	1
4	XDOZZ	04285	569106	BRACKET CLIP BATTERY INDICATOR UOC:CQK,U72	1
4	XDOZZ	03677	LT1-1366	STRIP,COPPER BATTERY INDICATOR UOC:CMP,CMQ,U73,U74	1
5	PAOZZ	96906	MS75004-2	TERMINAL,LUG BATTERY,NEGATIVE	2
6	PAOZZ	19207	583708	.BOLT,MACHINE BATTERY TERMINAL, WITH NUT	2
7	PFOZZ	96906	MS35355-67	.BOLT,MACHINE BATTERY TERMINAL, WITH NUT	2
8	PAOZZ	96906	MS75004-1	TERMINAL,LUG BATTERY,POSITIVE	2
9	PAOZZ	19207	583708	.BOLT,MACHINE BATTERY TERMINAL, WITH NUT	2
10	PFOZZ	96906	MS35355-67	.BOLT,MACHINE BATTERY TERMINAL, WITH NUT UOC:CQK,U72	2
10	PFOZZ	96906	MS35355-44	.BOLT,MACHINE SQUARE HEAD,TERMINAL, LEAD COATED,W/NUT UOC:CMP,CMQ,U73,U74	2
11	XDOZZ	04285	P67895	LEAD,ELECTRICAL BATTERY,CROSS UOC:CQK,U72	1
11	PAOZZ	03677	LT-1-44	LEAD,ELECTRICAL UOC:CMP,CMQ,U73,U74	1
12	PAOZZ	00642	XH-6491	LEAD,ELECTRICAL BATTERY TO STARTER	1
13	PAOZZ	03677	TC15-1733	TRAY,BATTERY	2
14	PAOZZ	04285	M69504	TUBING,NONMETALLIC BATTERY DRAIN UOC:CQK,U72	2
14	PAOZZ	98343	E20	TUBING,NONMETALLIC BATTERY UOC:CMP,CMQ,U73,U74	2
15	PAOFZ	96906	MS52149-1	BATTERY,STORAGE	2
16	PFOZZ	96906	MS51967-2	NUT,PLAIN,HEXAGON SLAVE RECEPTACLE MTG	4
17	PFOZZ	55110	6220-21	WASHER,LOCK SLAVE RECEPTACLE MTG	4
18	PFOZZ	96906	MS35206-284	SCREW,MACHINE SLAVE RECEPTACLE MTG UOC:CQK,U72	4
18	PFOZZ	96906	MS35206-283	SCREW,MACHINE RECEPTACLE MTG UOC:CMP,CMQ,U73,U74	4
19	PAOZZ	51831	2540-42	SLAVE RECEPTACLE AS	1
20	PAOZZ	77820	10-40736-24	.CONNECTOR,RECEPTACL	1

Current part is item (11) on diagram. Available at www.oshkoshequipment.com